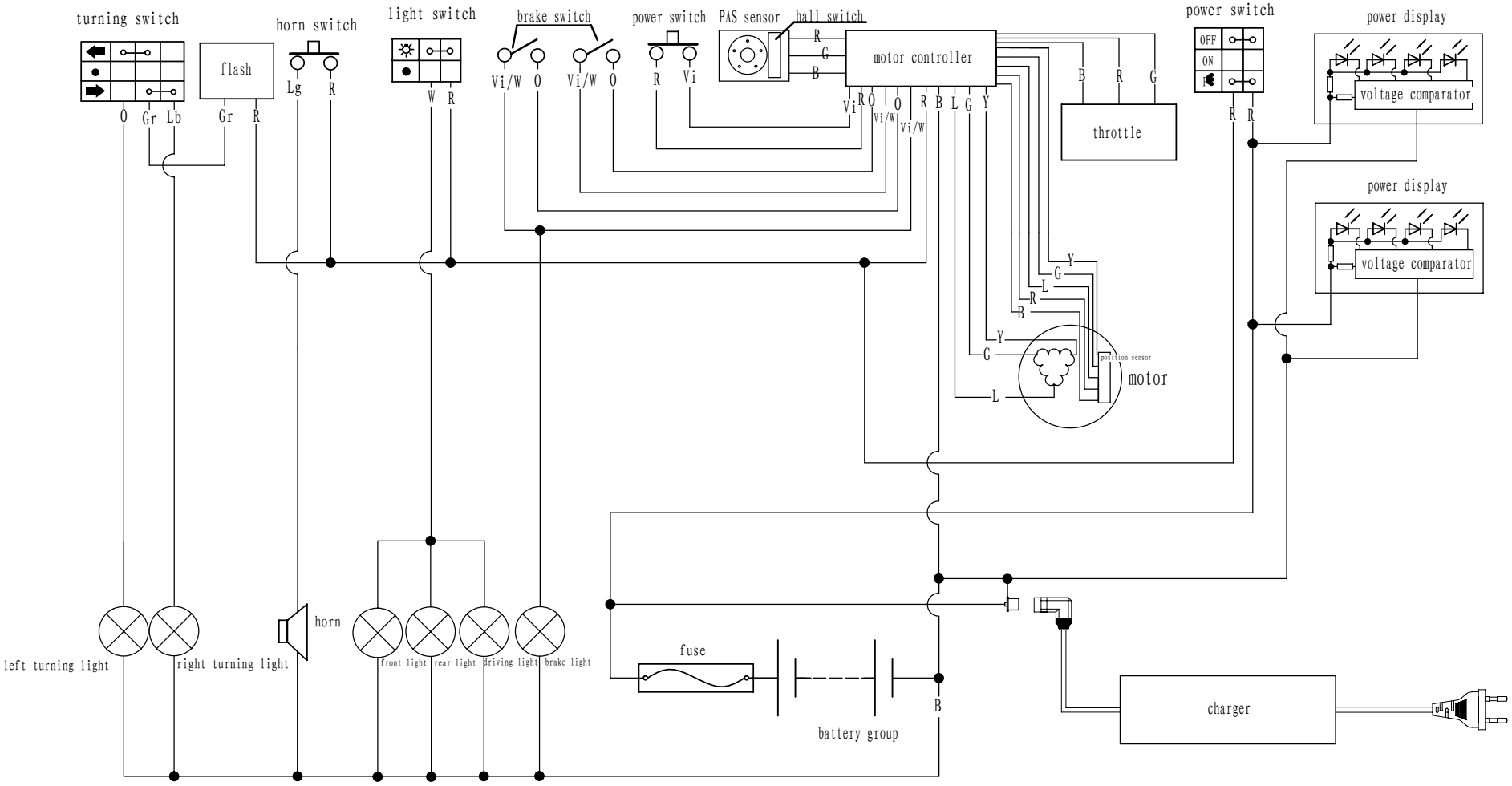

code	R	B	Y	L	G	W	Lg	Lb	Vi	Gr
line color	red	black	yellow	blue	green	white	light green	light blue	purple	grey